80013154

outdoor
Directional Antenna
XXPol 4-port 8/9dBi
1695-4200MHz

Directional antenna
4 x 1695-4200Mhz 8/9dBi

Type	80013154	
Frequency (MHz)	1695-2700	3300-4200
Gain (dBi)	7.2	8.4
VSWR	≤ 1.8	≤ 2.0 (3300-3800) ≤ 2.5 (3800-4200)
Polarization	±45˚	
PIM3 (dBc, @2x43dBm)	≤ -153	N/A
Isolation (dB)	≥ 23	≥ 20
Front-to-Back Ratio (dB)	≥ 15	≥ 15
Horizontal Beamwidth (°)	75	68
Vertical Beamwidth (°)	58	55
Input Impedance (ohm)	50	
Max. Input Power per port (W)	50	
Lightning Protection	DC grounded	
Connector	4 x 4.3-10 Female	
Dimension (mm)	315 x 195 x 68	
Weight (kgs)	Approx. 1.20	
Radome Material	ABS (UV Stabilized)	
Ingress protection	IP 54 (outdoor)	
Operating Temperature (°C)	-40 to +65	
Mounting	Fixed wall mounting bracket included	
Optional accesory (*order separately)	Universal Mounting Bracket 70010015v01 Wall mount: ±25° horizontal swivel & +27°/-35° vertical tilt Pole mount: ±45° horizontal swivel; pole size Ø38-Ø52mm	



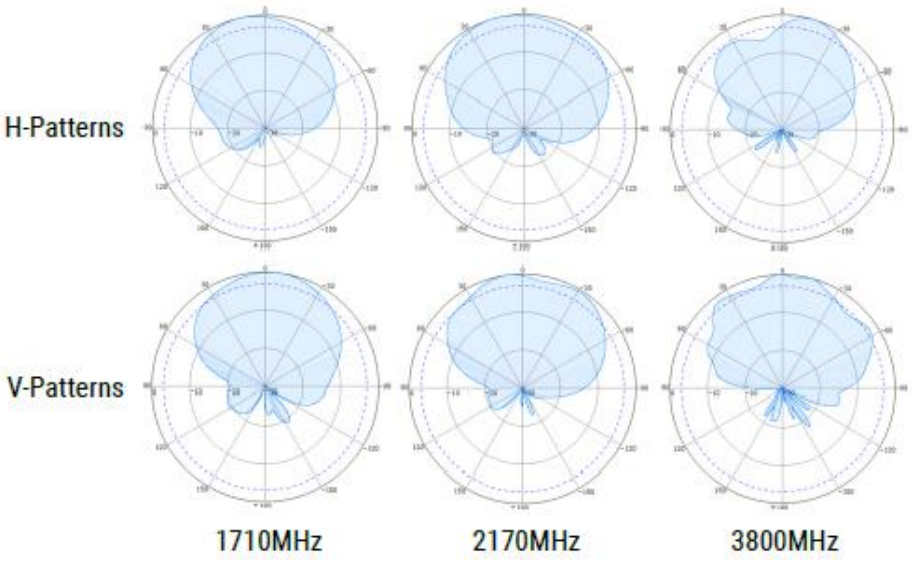

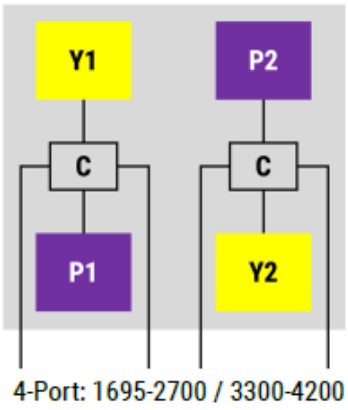

Mechanical Dimensions

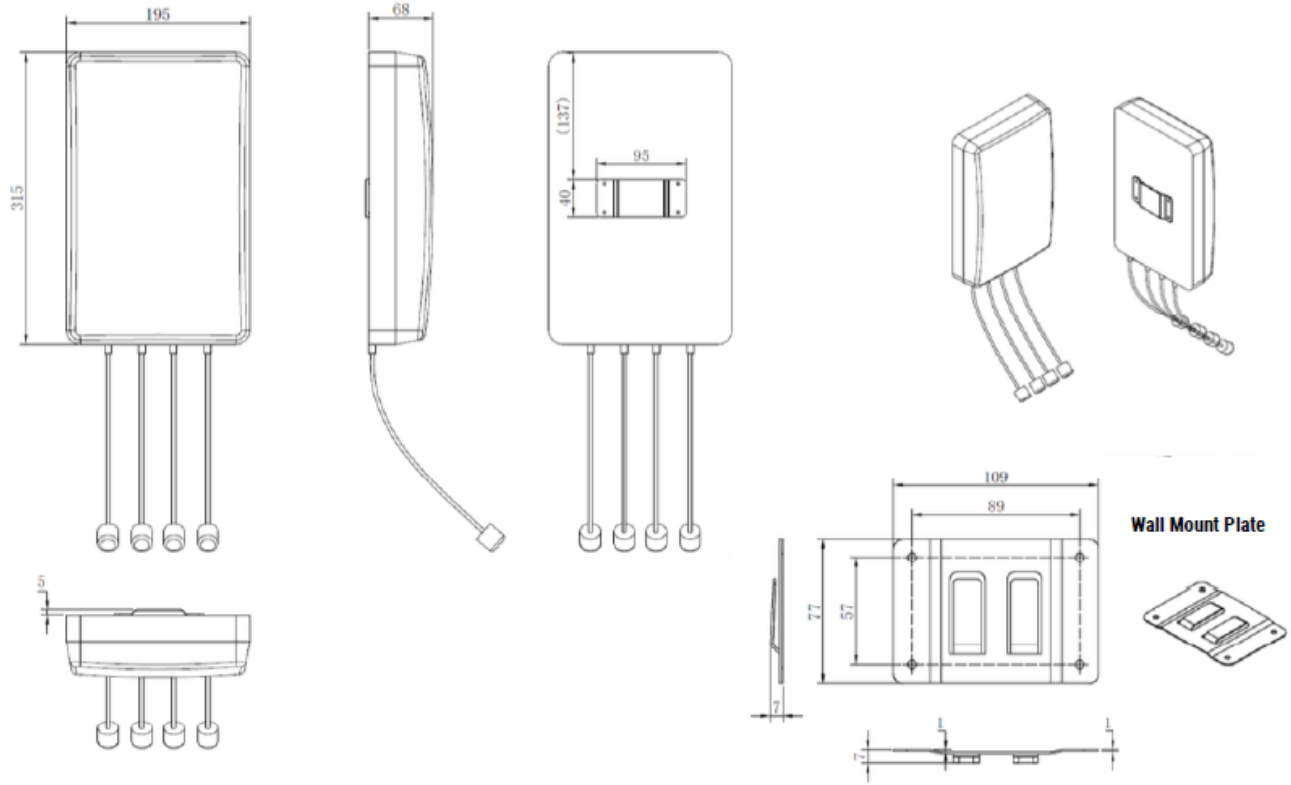

1 Installation Guide (Standard Wall Mount)

Precaution and Disclaimer:
The installation materials supplied with this antenna are supposed to be used by qualified professionals. Use of these materials is at the discretions of the installer and/or customer. ESB holds no responsibility of any damage due to improper use of these materials and/or improper installation.

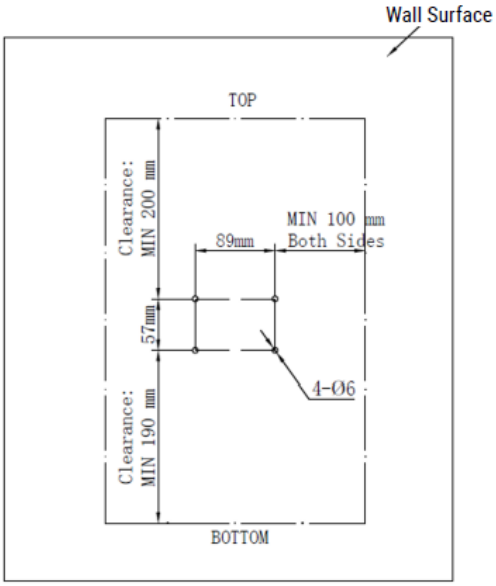

Drawing 1

1.1 Ensure sufficient space on wall for installing the antenna. The space required is 289mm (W) x 447mm (H). Space required is larger than the size of the antenna.

1.2 Drill 4 holes (Ø6mm) on the wall. The locations of the holes are mentioned in Drawing 1. Drawing is not to scale and is for illustration only.

1.3 Insert the plugs supplied into the holes. The plugs are suitable for dry wall and wooden wall. Different wall materials may require different wall plugs. Installer should consult qualified professionals for suitable wall plug types.

1.4 Secure the mounting plate on the wall with the screws supplied per Drawing 2. The opening of the plates should face upward.

1.5 Insert the antenna onto the mounting plate securely.

1.6 Connect the RF cables to the pigtails of the antenna.

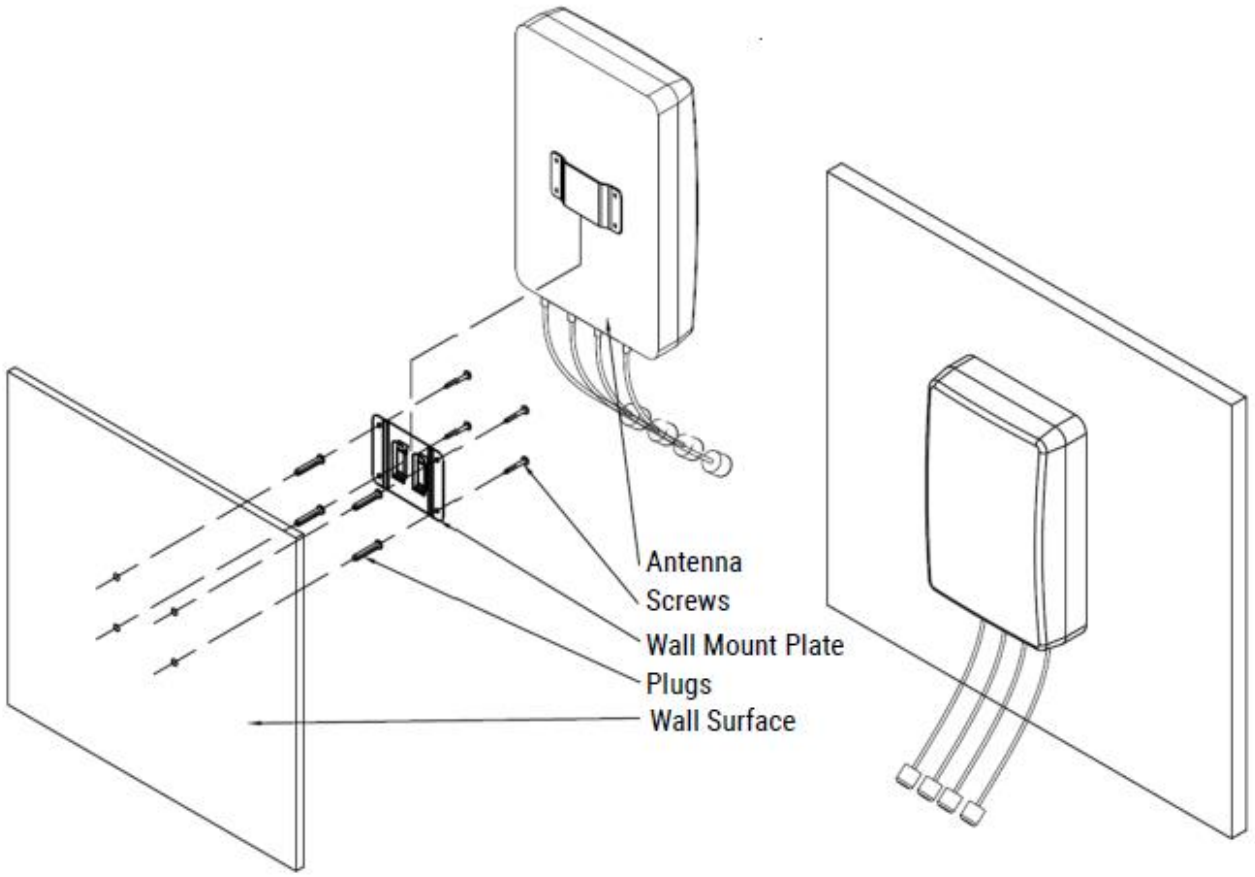

2 Installation Guide (Wall Mount with Optional Universal Bracket)

Precaution and Disclaimer:
The installation materials supplied with this antenna are supposed to be used by qualified professionals. Use of these materials is at the discretions of the installer and/or customer. ESB holds no responsibility of any damage due to improper use of these materials and/or improper installation.

2.1 Ensure sufficient space on wall for installing the antenna. The space required is 318mm (W) x 413mm (H). Space required is larger than the size of the antenna.

2.2 Drill 4 holes (Ø8mm) on the wall. The locations of the holes are mentioned in Drawing 1 above. Drawing is not to scale and is for illustration only.

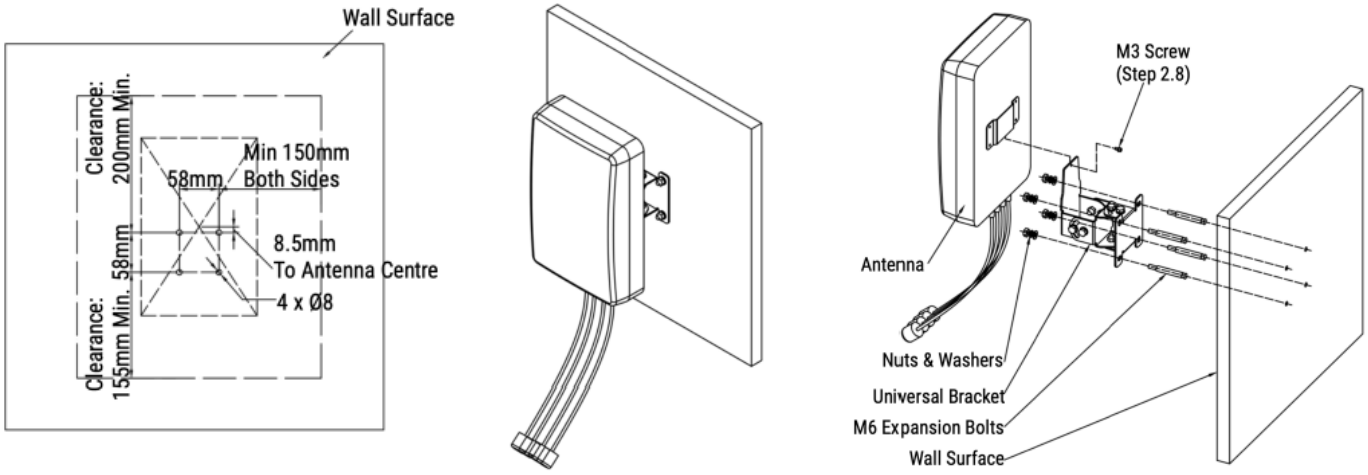

2.3 Insert the expansion bolts into the holes.

2.4 Secure the universal bracket on the surface with the nuts and washers as per above drawing. The flap of the bracket should face upward.

2.5 Insert the antenna onto the flap.

2.6 Connect the RF cables to the pigtails of the antenna.

2.7 Adjust the antenna to the desired angles.

2.8 Lock the antenna to the flap with the M3 screw. This screw is to prevent the antenna from falling off from the bracket.

3 Installation Guide (Pole Mount with Optional Universal Bracket)

Precaution and Disclaimer:
The installation materials supplied with this antenna are supposed to be used by qualified professionals. Use of these materials is at the discretions of the installer and/or customer. ESB holds no responsibility of any damage due to improper use of these materials and/or improper installation.

3.1 Ensure the pole is strong enough to support the antenna and its accessories. The size of the pole is Ø38-Ø52mm

3.2 Mount the universal bracket onto the pole with U-clamps, grip plates and nuts/spring washers/flat washers. The flap of the universal bracket must face upward.

3.3 Insert the antenna onto the flap.

3.4 Connect the RF cables to the pigtails of the antenna.

3.5 Adjust the antenna to the desired angles.

