80112751

Directional Antenna
X-Pol 2-port 10dBi 65°
1710-2690 / 3300-4200
Fixed Electrical D/T (0T)

XPol Directional
1710-2690/ 3300-4200 10dBi 0°T

Type	80112751	
Frequency Range (MHz)	1710-2690	3300-4200
Gain (dBi)	10	10
VSWR	≤ 1.5	
3rd Order PIM (dBc)	≤ -150 @ 2x43dBm	N/A
Polarization	±45°	
Electrical Tilt (°)	0	
Horizontal Beamwidth (°)	65	65
Vertical Beamwidth (°)	60	60
Input Impedance (ohm)	50	
Max. Input Power (W)	100	
Front-to-Back Ratio (dB)	≥ 23	
Isolation (dB)	≥ 25	
Lightning Protection	DC Grounded	
Connector Type	2 x 4.3-10 Female	
Dimension (mm)	200 x 160 x 80	
Weight (kgs)	1.0	
Radome Material	UV-PVC (light gray)	
Ingress protection	IP56	
Reflector Material	Aluminum	
Rated Wind Velocity (km/h)	210	
Operating Temperature (°C)	-40 to +70	
Mounting	Mechanical Adjustable Downtilt Clamp for Pole Diameter 38-110 included	



Typical Radiation Patterns

H-Patterns

V-Patterns

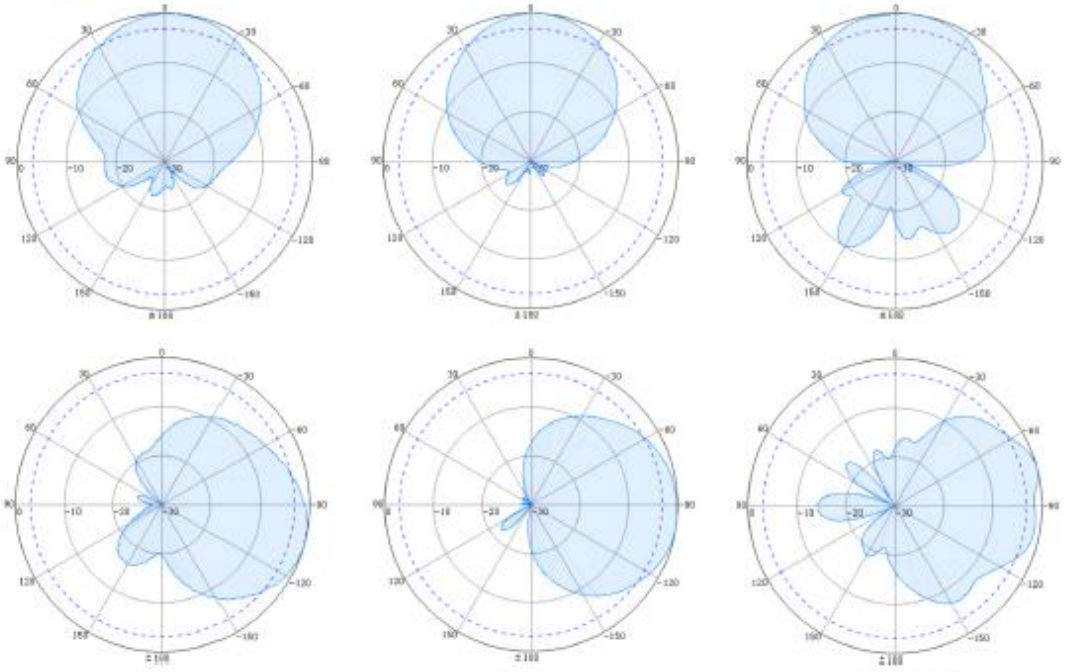

1710MHz 2170MHz 3800MHz

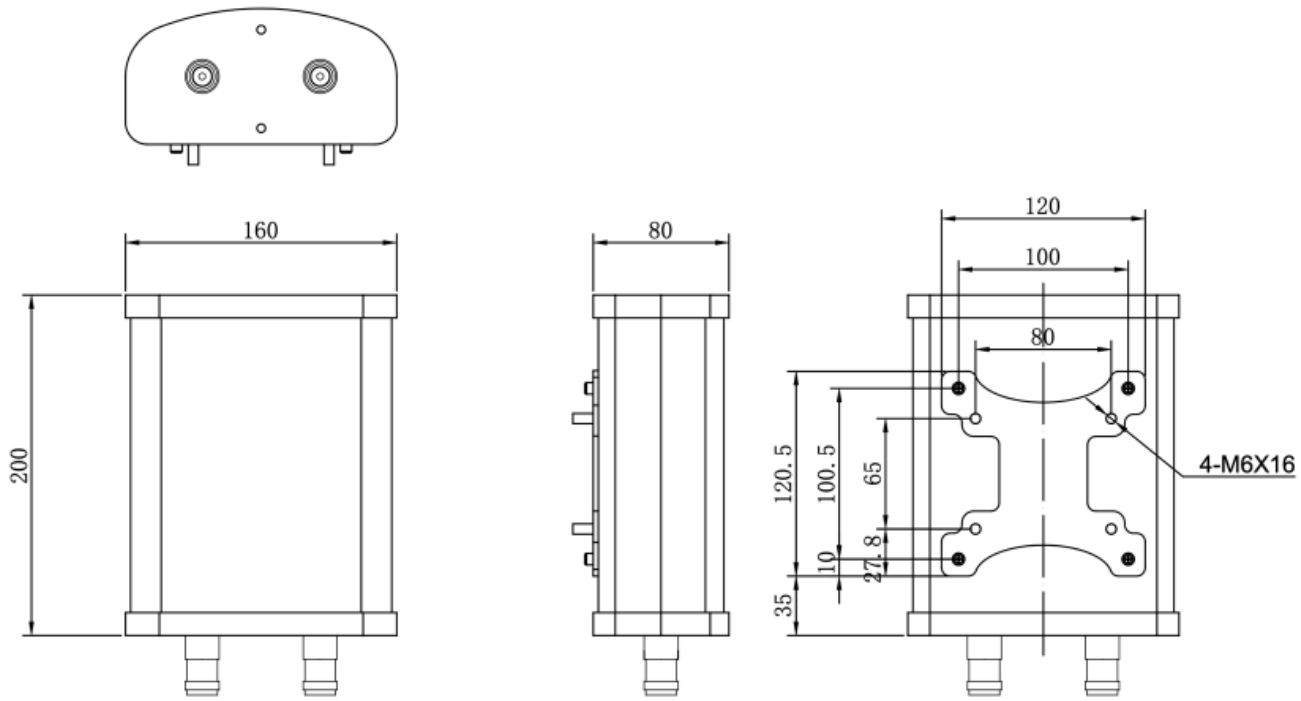

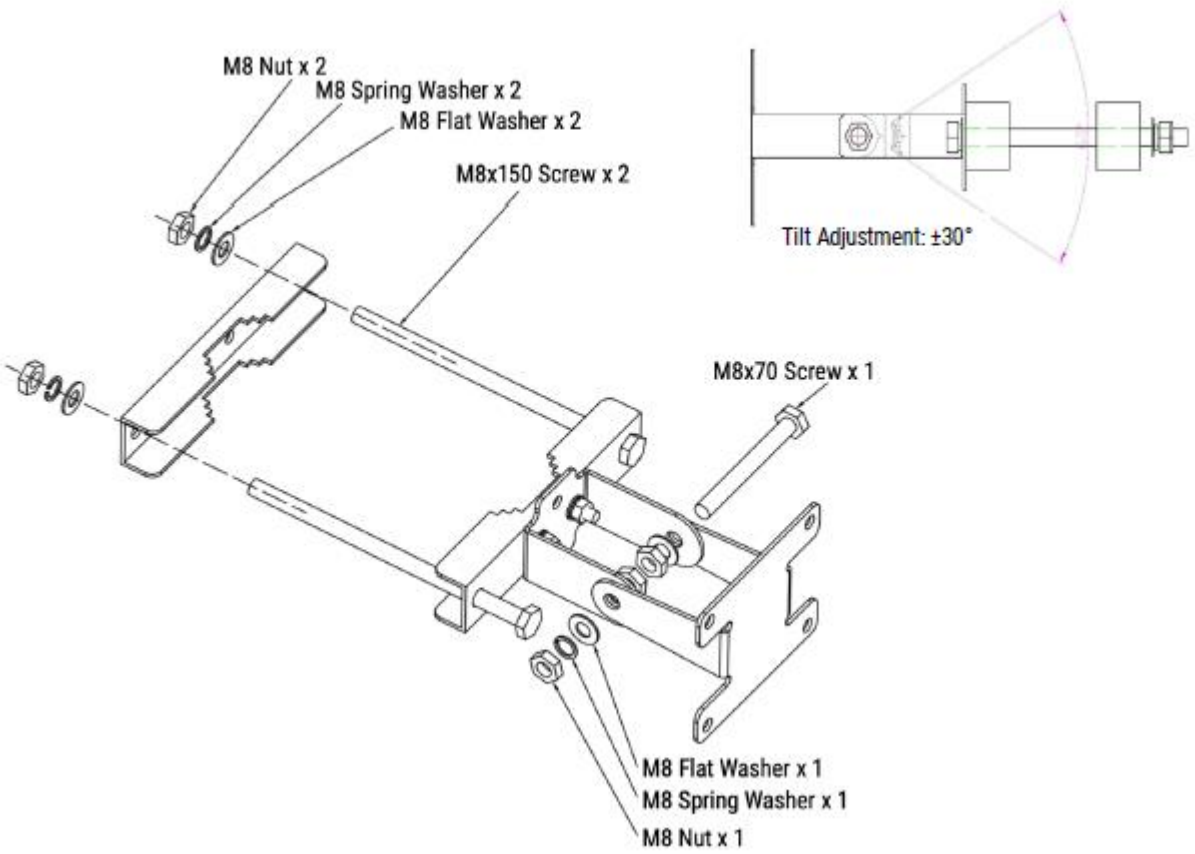
M8 Nut x 2
M8 Spring Washer x 2
M8 Flat Washer x 2
M8x150 Screw x 2
M8x70 Screw x 1
M8 Flat Washer x 1
M8 Spring Washer x 1
M8 Nut x 1
Tilt Adjustment: ±30°

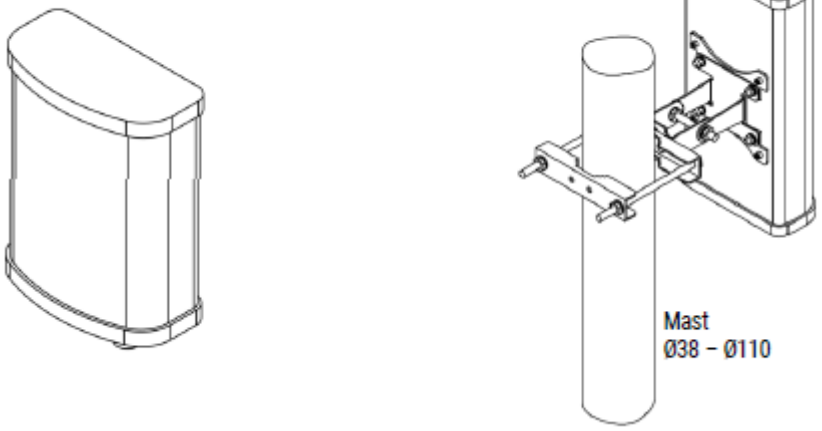
Mast
Ø38 – Ø110